VILLA

Deck Mounted Regalia Spout with Villa Handle 3 hole ensemble for Vanity with Pop-Up. ½" NPT

* Also available with no shield detail on body.

Ref #:

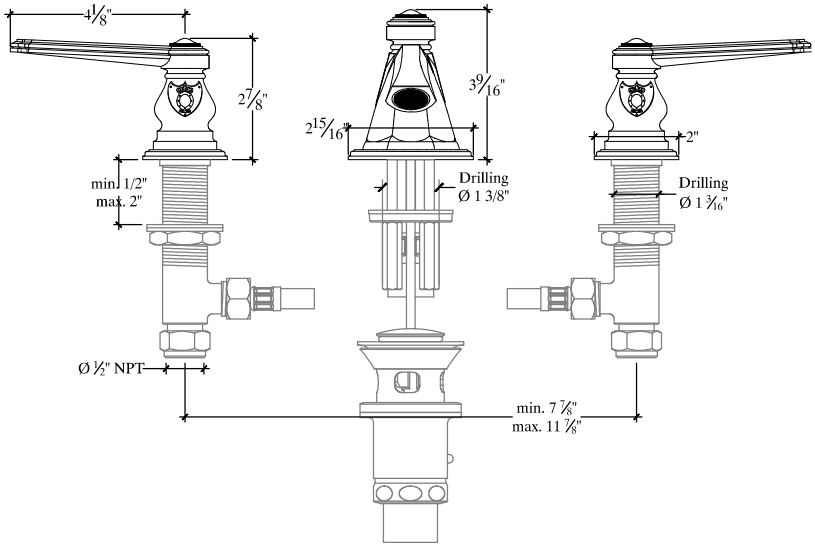

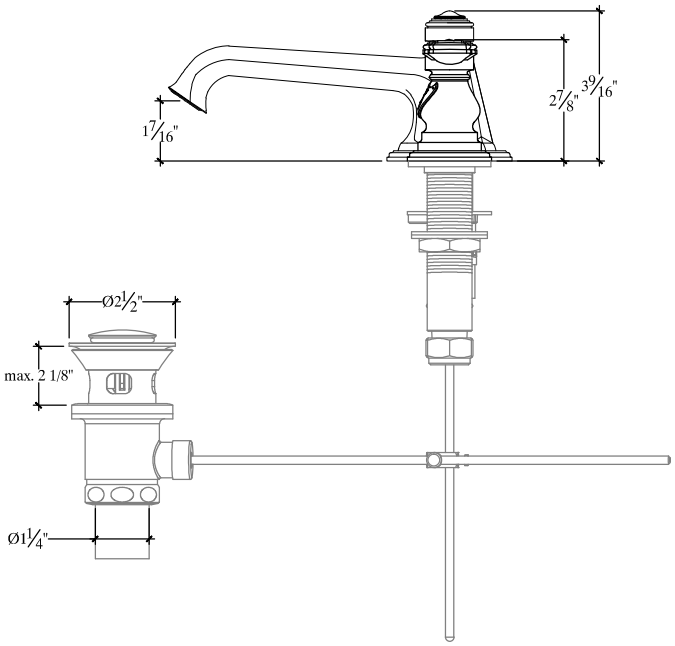

Copyright © Compas 2010 www.compasstone.com

COMPAS